Digital Electronic Circuits (EC2L004)

Lecture 13: Analysis of Clocked Sequential Circuits

Learning Objectives

- Analysis of Clocked Sequential circuits
  - State Equations
  - State Table
  - State Diagram
- Analysis with D Flip-Flops, J-K Flip-Flops, T Flip-Flops.
- State Reduction and Assignment

Example Sequential Circuit

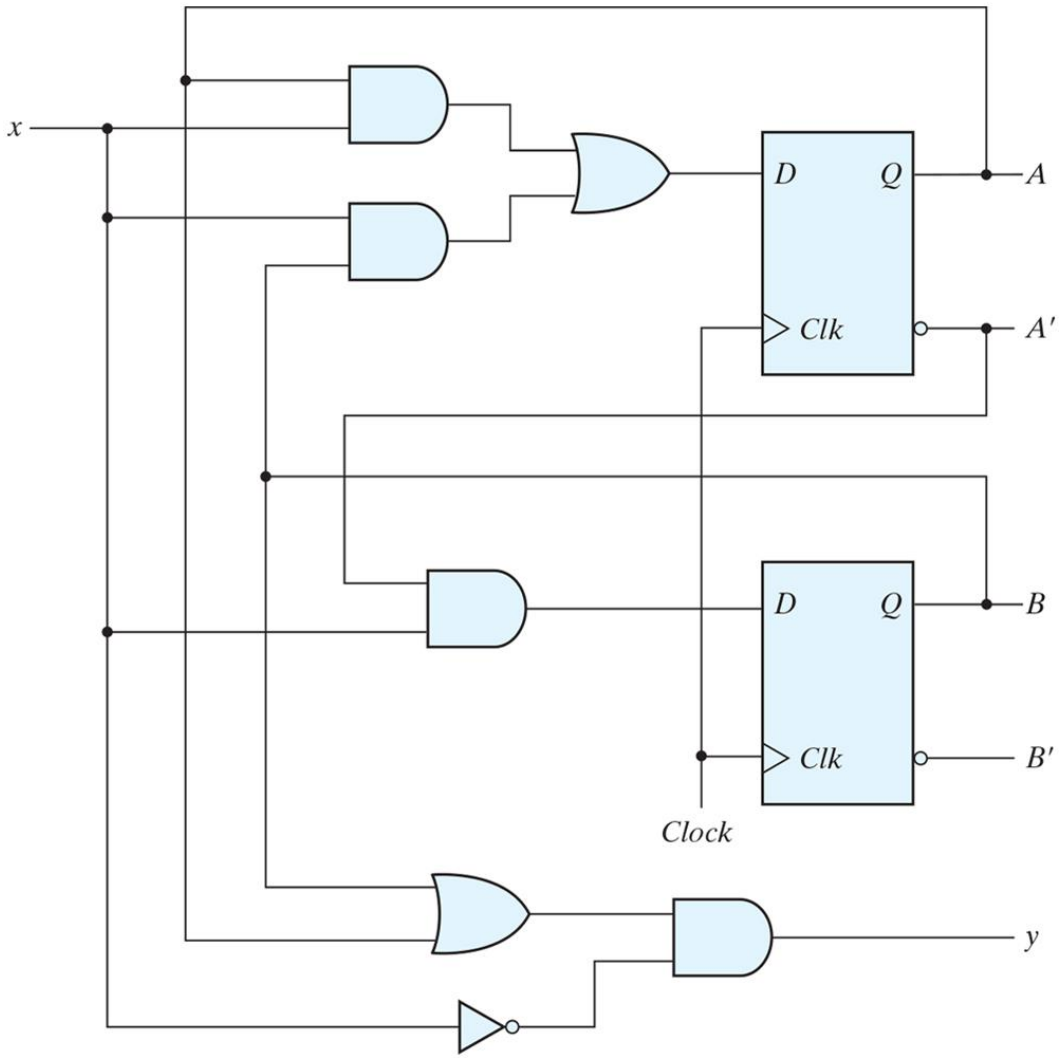

Example Sequential Circuit…Cont'd

- State table

Present State		Input	Next State		Output
A	*B*	*x*	*A*	*B*	*y*
0	0	0	0	0	0
0	0	1	0	1	0
0	1	0	0	0	1
0	1	1	1	1	0
1	0	0	0	0	1
1	0	1	1	0	0
1	1	0	0	0	1
1	1	1	1	0	0

Example Sequential Circuit…Cont'd

- State diagram

Present State		Next State				Output	
		$x = 0$		$x = 1$		$x = 0$	$x = 1$
A	B	A	B	A	B	y	y
0	0	0	0	0	1	0	0
0	1	0	0	1	1	1	0
1	0	0	0	1	0	1	0
1	1	0	0	1	0	1	0

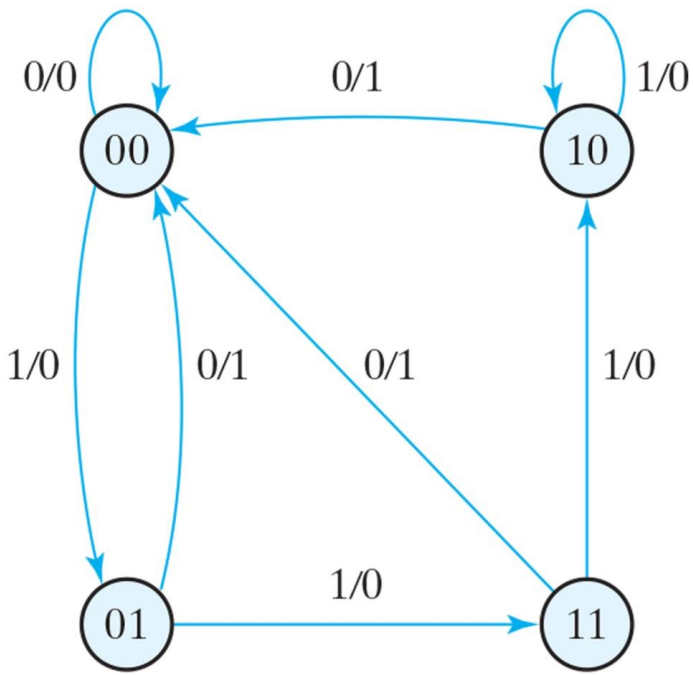

Analysis with D Flip-Flops

- Flip-Flop input Equation $D_A = A \oplus x \oplus y$

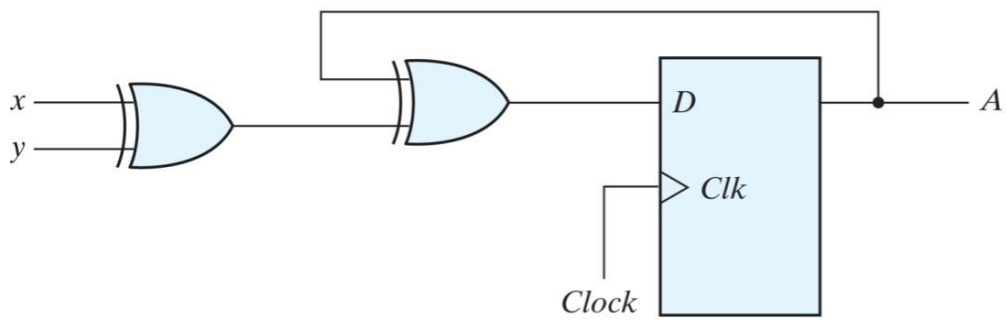

(a) Circuit diagram

Present state	Inputs		Next state
A	x	y	A
0	0	0	0
0	0	1	1
0	1	0	1
0	1	1	0
1	0	0	1
1	0	1	0
1	1	0	0
1	1	1	1

(b) State table

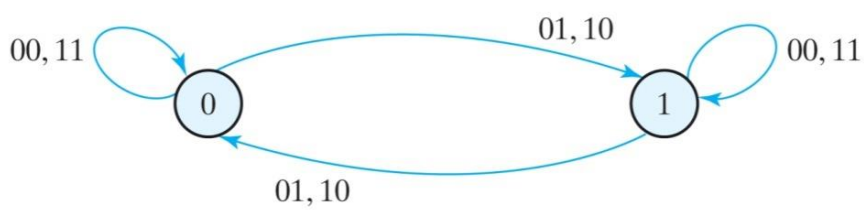

(c) State diagram

Analysis with JK Flip-Flop

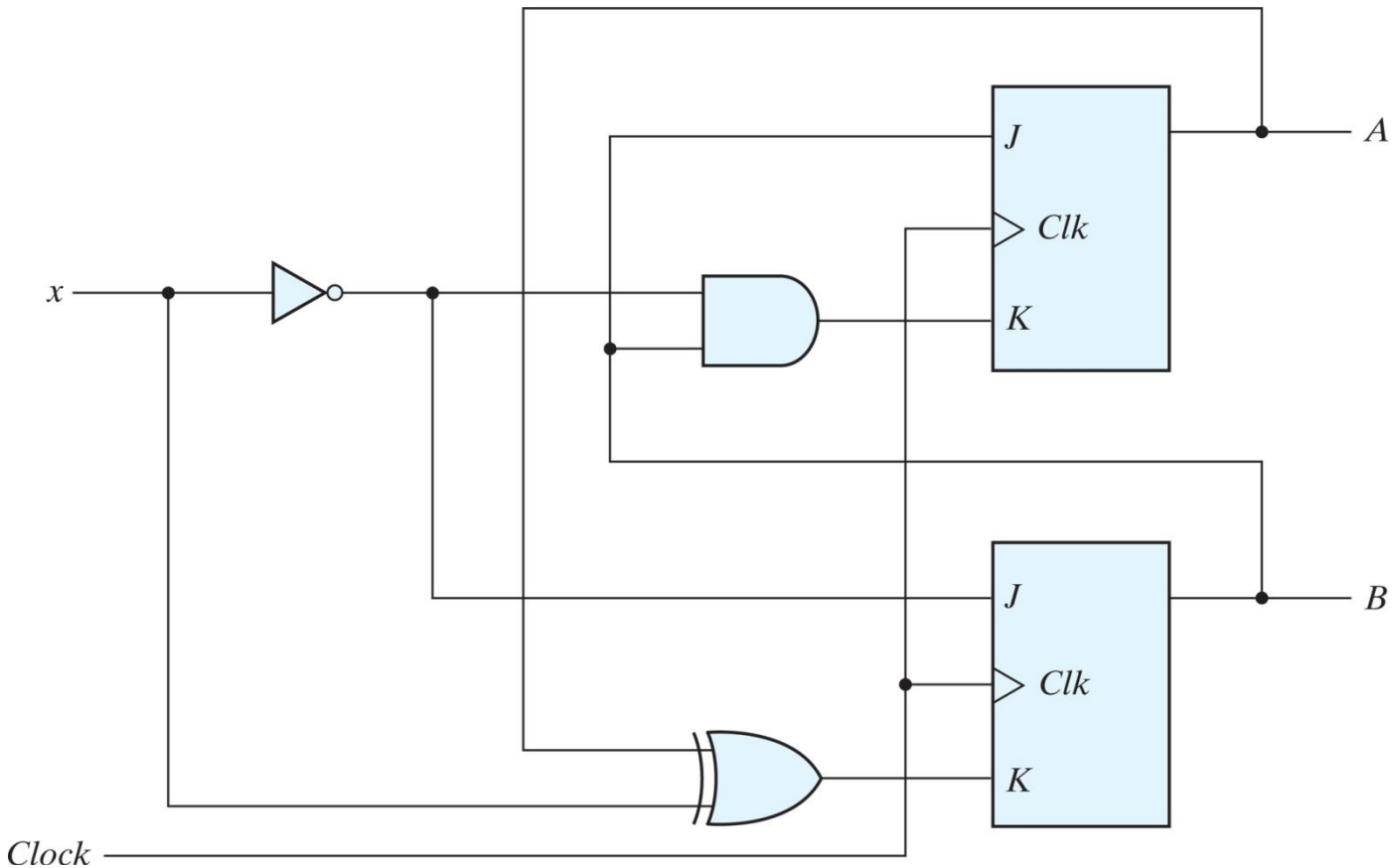

Analysis with JK Flip-Flop…Cont'd

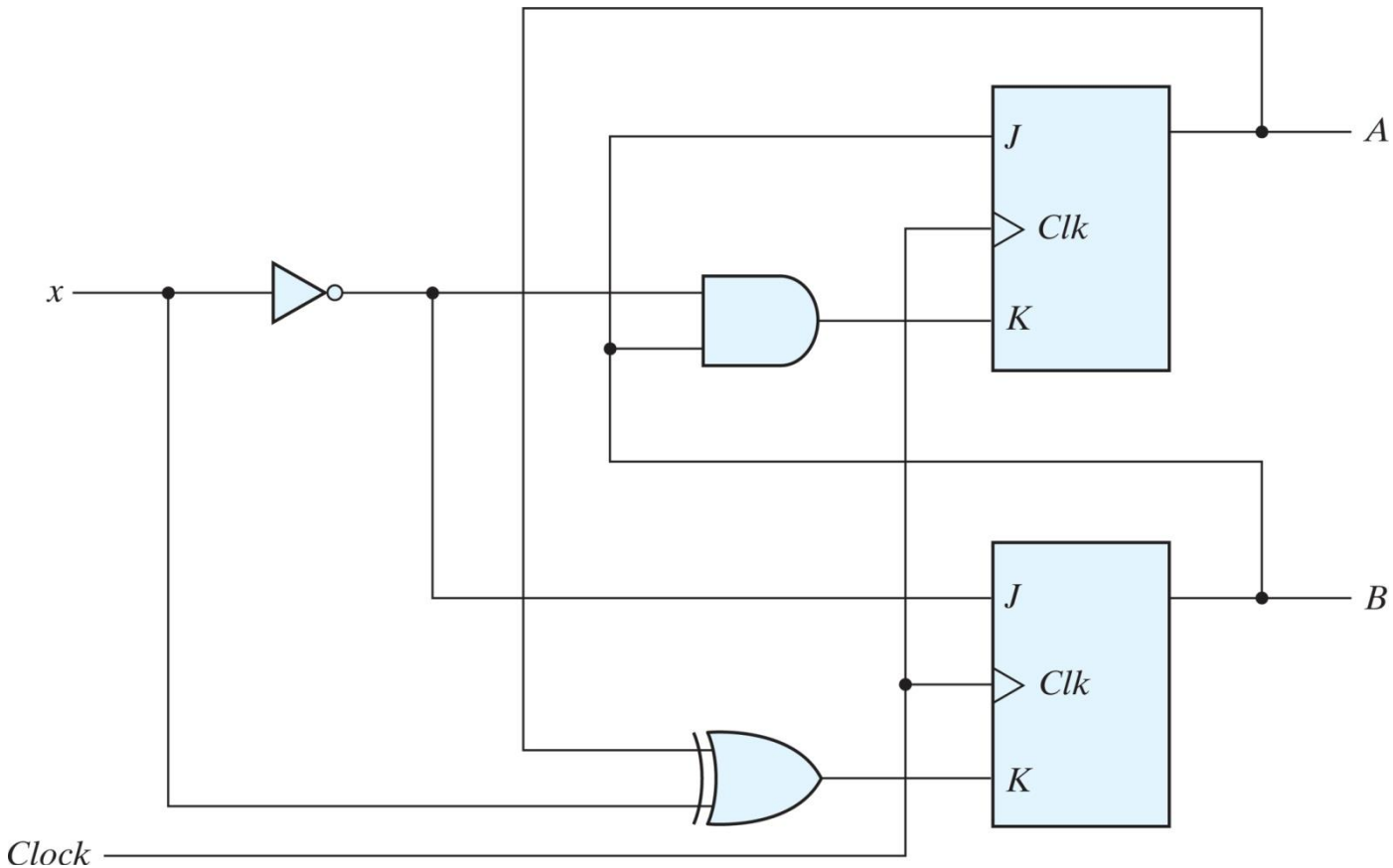

Analysis with JK Flip-Flop…Cont'd

$$J_A = B \quad K_A = Bx'$$
$$J_B = x' \quad K_B = A'x + Ax' = A \oplus x$$

$$A(t+1) = JA' + K'A$$
$$B(t+1) = JB' + K'B$$

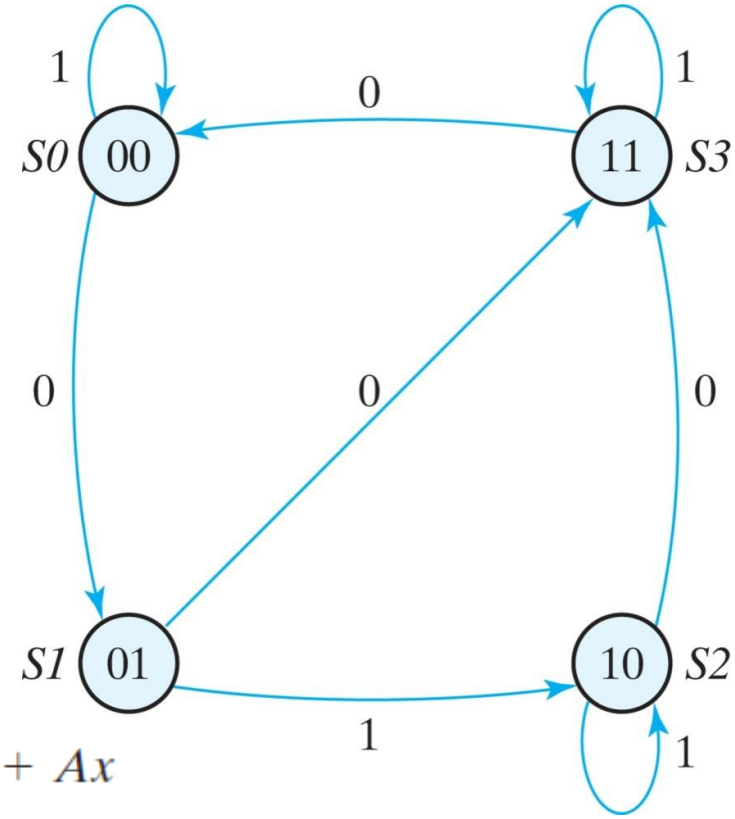

$$A(t+1) = BA' + (Bx')'A = A'B + AB' + Ax$$
$$B(t+1) = x'B' + (A \oplus x)'B = B'x' + ABx + A'Bx'$$

Analysis with T Flip-Flops

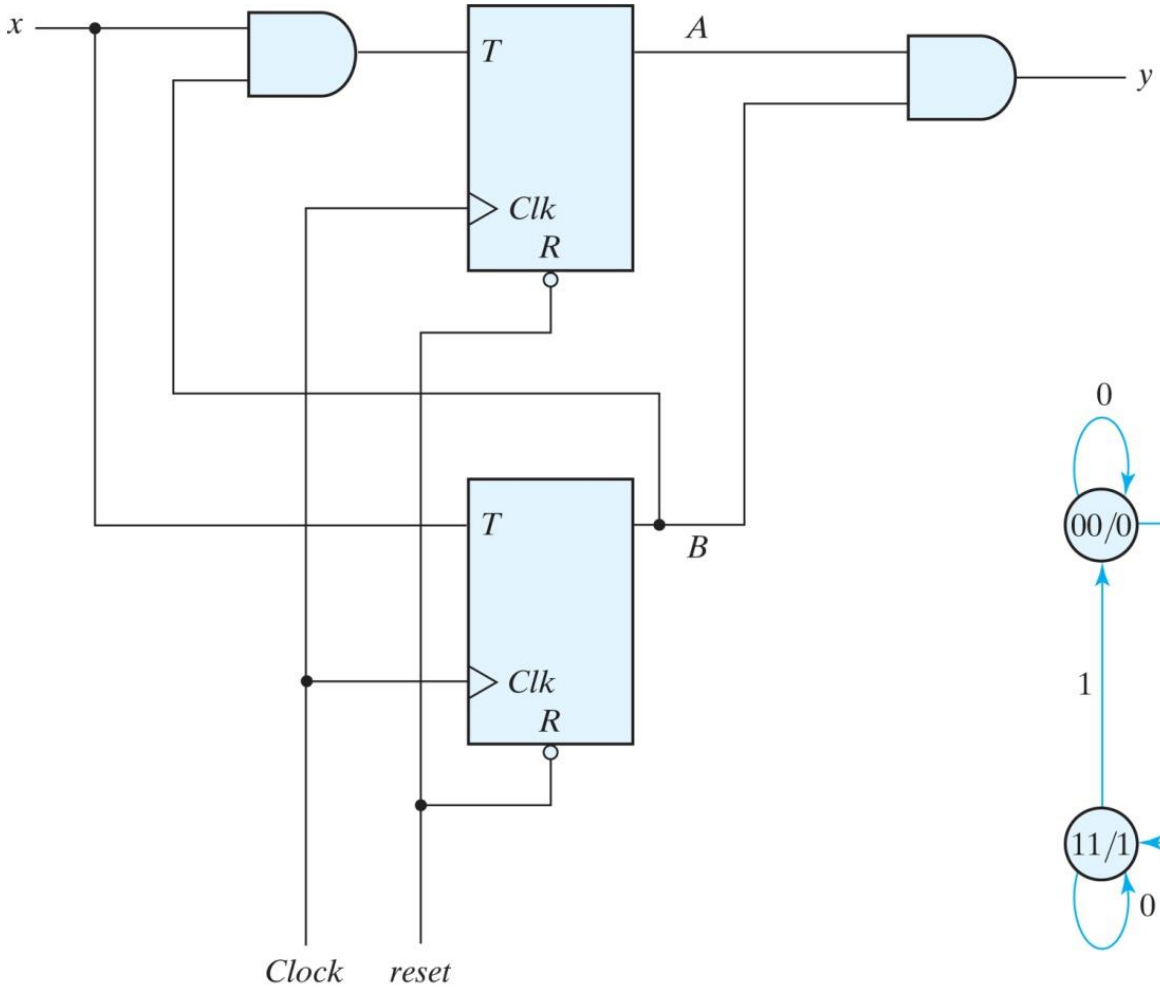

(a) Circuit diagram

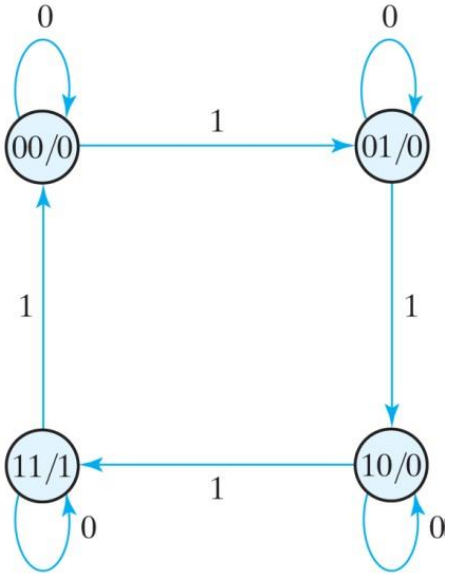

(b) State diagram

Mealy and Moore Models of Finite State Machines

- Mealy model, the output is a function of both the present state and the input.
- Moore model, the output is a function of only present state

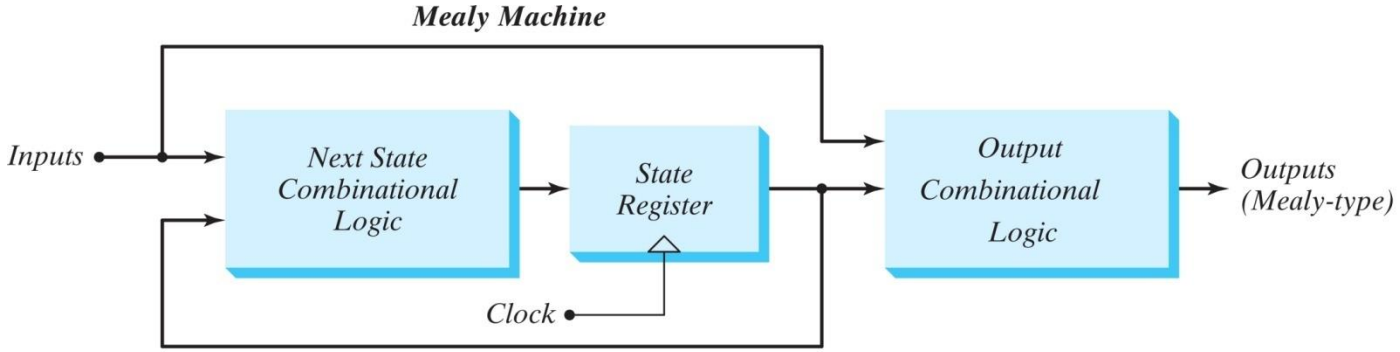

(a)

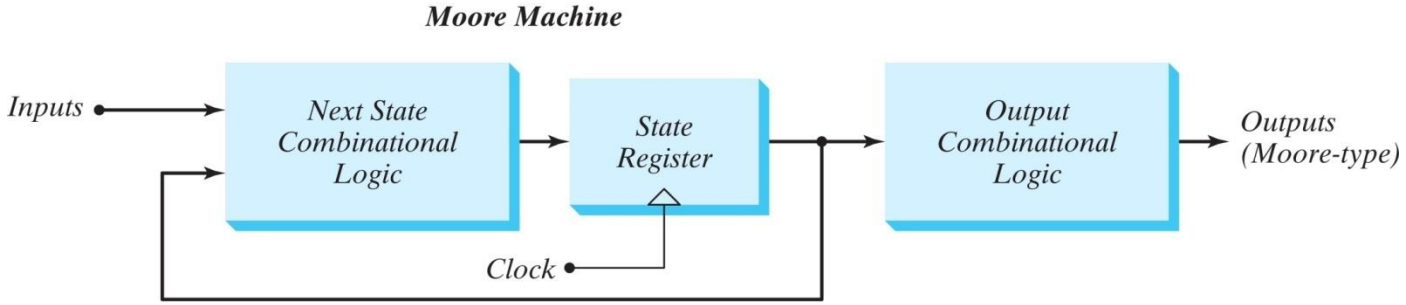

(b)

State Reduction and Assignment

- In the design process of sequential circuits certain techniques are useful in reducing the circuit complexity
  - State reduction
  - State assignment

- State reduction
  - Fewer states ➔ fewer number of flip-flops
  - m flip-flops ➔ 2^m states
  - Example: m = 5 ➔ $2^m = 32$
    - If we reduce the number of states to 21 do we reduce the number of flip-flops?

Example: State Reduction

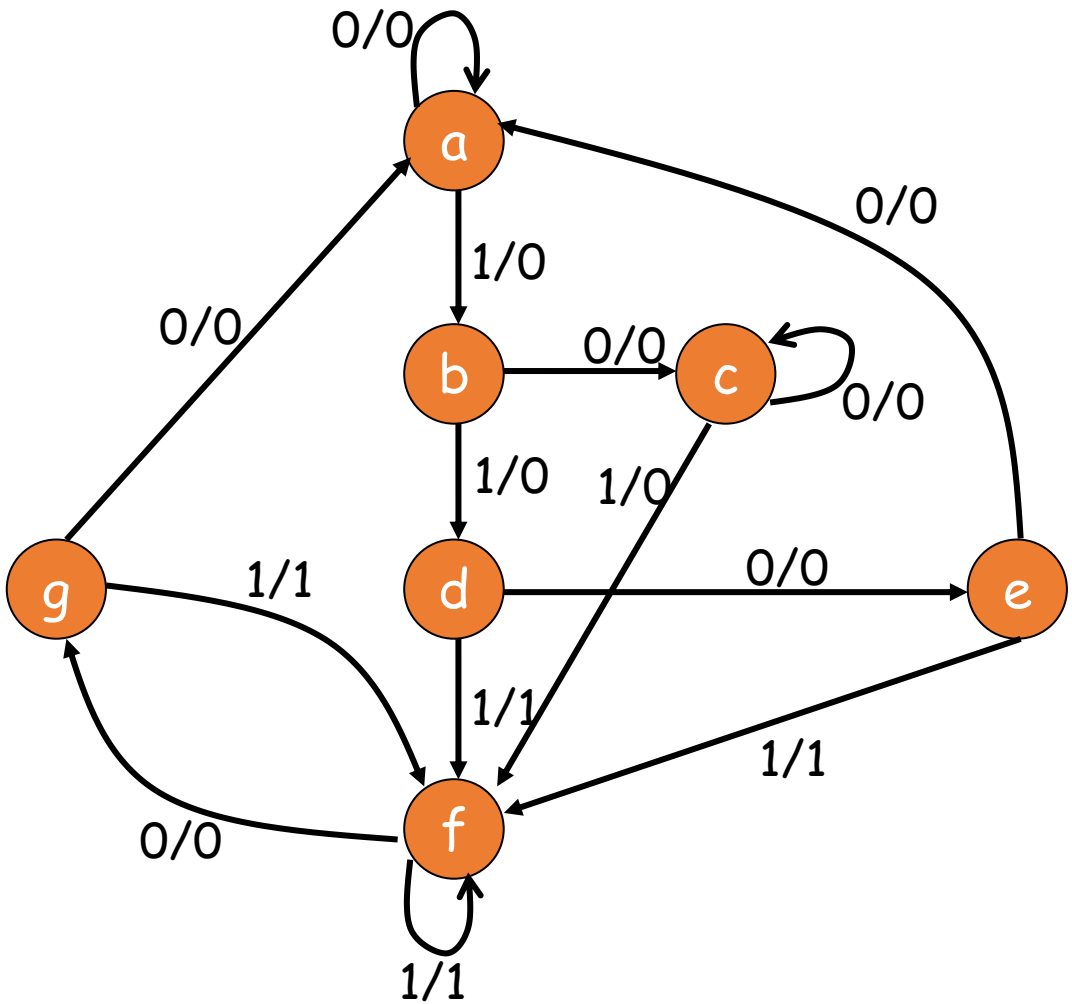

Note that we use letters to designate the states for the time being

Example: State Reduction

state	a	a	b	c	f	g	f	f	g	a	a		
input	0	1	0	1	0	1	1	0	0	0	0		
output	0	0	0	0	0	1	1	0	0	0			

- What is important
  - not the states
  - but the output values the circuit generates
- Therefore, the problem is to find a circuit
  - with fewer number of states,
  - but that produces the same output pattern for any given input pattern, starting with the same initial state

State Reduction Technique 1/7

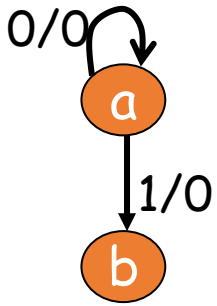

- <u>Step 1</u>: get a state table

present state	next state		Output	
	x = 0	x = 1	x = 0	x = 1
a	a	b	0	0
b	c	d	0	0
c	c	f	0	0
d	e	f	0	1
e	a	f	0	1
f	g	f	0	1
g	a	f	0	1

State Reduction Technique 2/7

- Step 2: Inspect the state table for equivalent states
  - Equivalent states: Two states,
    1. that produce exactly the same output
    2. whose next states are identical
  - for each input combination

State Reduction Technique 3/7

present state	next state		Output	
	x = 0	x = 1	x = 0	x = 1
a	a	b	0	0
b	c	d	0	0
c	c	f	0	0
d	e	f	0	1
e	a	f	0	1
f	g	f	0	1
g	a	f	0	1

- States "e" and "g" are equivalent
- One of them can be removed

State Reduction Technique 4/7

present state	next state		Output	
	x = 0	x = 1	x = 0	x = 1
a	a	b	0	0
b	c	d	0	0
c	c	f	0	0
d	e	f	0	1
e	a	f	0	1
f	e	f	0	1

- We keep looking for equivalent states

State Reduction Technique 5/7

present state	next state		Output	
	x = 0	x = 1	x = 0	x = 1
a	a	b	0	0
b	c	d	0	0
c	c	d	0	0
d	e	d	0	1
e	a	d	0	1

- We keep looking for equivalent states

State Reduction Technique 6/7

present state	next state		Output	
	x = 0	x = 1	x = 0	x = 1
a	a	b	0	0
b	b	d	0	0
d	e	d	0	1
e	a	d	0	1

- We stop when there are no equivalent states

State Reduction Technique 7/7

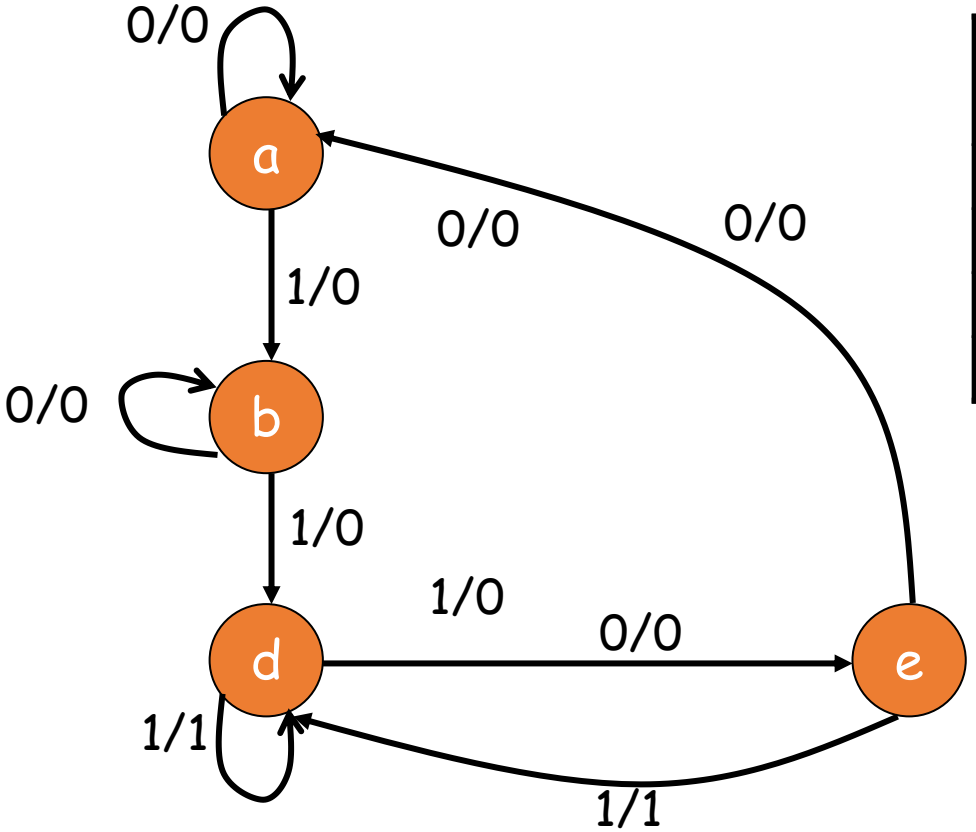

present state	next state		Output	
	x = 0	x = 1	x = 0	x = 1
a	a	b	0	0
b	b	d	0	0
d	e	d	0	1
e	a	d	0	1

We need two flip-flops

state	a	a	b	b	d	e	d	d	e	d	e		
input	0	1	0	1	0	1	1	0	1	0	0		
output	0	0	0	0	0	1	1	0	0	0	0		

State Assignments 1/4

- We have to assign binary values to each state
- If we have m states, then we need a code with minimum n bits, where $n = \lceil \log_2 m \rceil$
- There are different ways of encoding
- <u>Example</u>: Eight states: S_0, S_1, S_2, S_3, S_4, S_5 , S_6 , S_7

State	Binary	Gray	One-hot
S_0	000	000	000001
S_1	001	001	000010
S_2	010	011	000100
S_3	011	010	001000
S_4	100	110	010000
S_5	101	111	100000
S_6	111	101	100000
S_7	111	100	100000

State Assignments 2/4

- The circuit complexity depends on the state encoding (assignment) scheme
- Previous example: binary state encoding

present state	next state		Output	
	x = 0	x = 1	x = 0	x = 1
(a) 00	00	01	0	0
(b) 01	01	10	0	0
(d) 10	11	10	0	1
(e) 11	00	10	0	1

State Assignments 3/4

- Gray encoding

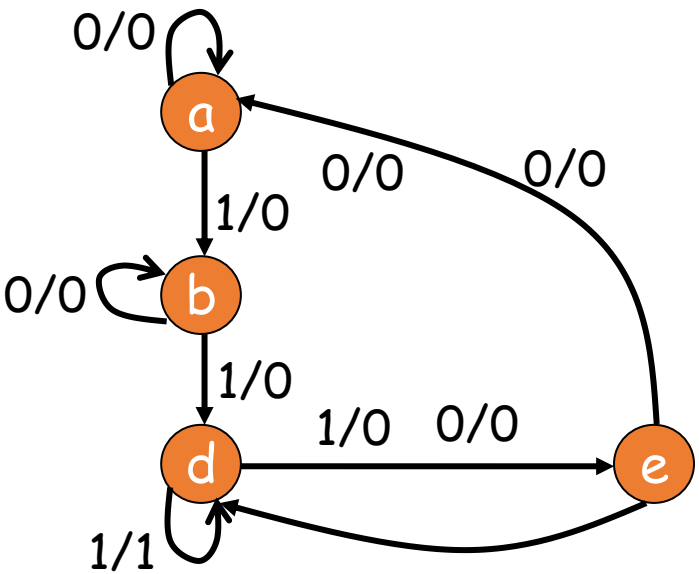

present state	next state		Output	
	x = 0	x = 1	x = 0	x = 1
(a) 00	00	01	0	0
(b) 01	01	11	0	0
(d) 11	10	11	0	1
(e) 10	00	11	0	1

State Assignments 4/4

- One-hot encoding

present state	next state		Output	
	x = 0	x = 1	x = 0	x = 1
(a) 0001	0001	0010	0	0
(b) 0010	0010	0100	0	0
(d) 0100	1000	0100	0	1
(e) 1000	0001	0100	0	1

Thank you!!!